APPROVED FOR PRODUCTION

Wire Size Chart

Breaker Size	Wire Size	Breaker Size	Wire Size
15A	#14	80A	#4
20A	#12	90A	#3
30A	#10	100A	#3
40A	#8	115A	#2
50A	#8	130A	#1
60A	#6	150A	1/0

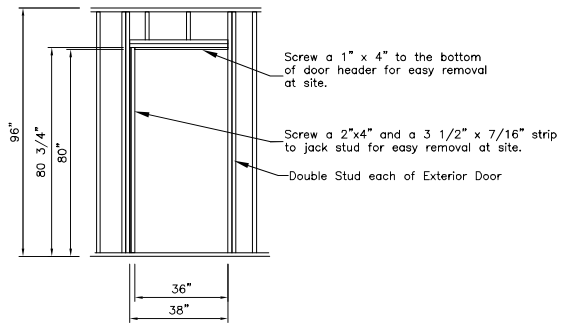

Framing for Exterior Door "A"

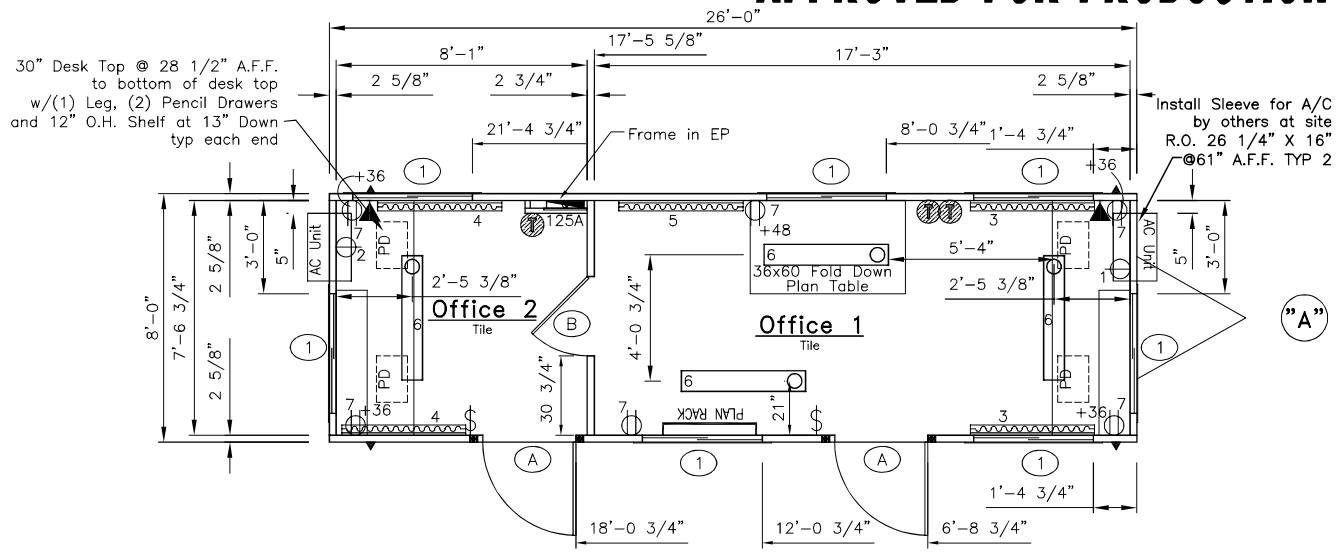

DRAWING LEGEND

SYMBOL	QTY.	DESCRIPTION
▶	2	Over the Floor hurricane straps/Tie down locations
	1	120/240 electric panel
	5	120V Electric 48" baseboard heater (+4" A.F.F.)
	3	Thermostat (+54" A.F.F.)
	6	120V ivory duplex grounding type (+18" AFF unless noted)
	2	120V ivory single A/C Recept (+54" AFF)
◀	2	2x4-jbox w/3/4" conduit thru floor for phone/data (+36" AFF unless noted)
	2	120V ivory toggle type (+48" AFF unless noted)
	4	120V 4' (2) tube surface mount w/diffuser

PNL A

A 120/240v 1PH 60HZ PANEL
125A 2-pole breaker
1 1/2" EMT conduit
(3) #1 THW feeders
#6 GRND

Module: A

Area served 208 ft
Main Breaker 125A
Panel Voltage 240
Panel Phase 1

CKT#	Breaker size	Description	QTY	Voltage	Wattage per item	Connected Load	Load Factor	Calculated load	Total
1	20 /1	8,000 BTU AC	1	120	940	940	1.00	940	940
2	20 /1	8,000 BTU AC	1	120	940	940	1.00	940	940
3	20 /1	Baseboard Heater	2	120	1000	2000	1.25	2500	2500
4	20 /1	Baseboard Heater	2	120	1000	2000	1.25	2500	2500
5	20 /1	Baseboard Heater	1	120	1000	1000	1.25	1250	1250
6	15 /1	Lights (2-tube)	4	120	67.2	268.8	1.25	336	336
7	15 /1	Recepts	6	120	180	1080	1.00	1080	1080

Total connected load	9546.00
Actual light load	336.00
TCL - ACL	9210.00
NEC LT load factor 3.5	910.00
Total Load	10120.00
Panel load amps	42.17

Electrical Riser Diagram
NTS

DOOR & WINDOW SCHEDULE

SYMBOL	QTY.	DESCRIPTION	ROUGH OPENING
A	2	36x80 standard vinyl clad door w/alum. frame and 10x10 safety glazed lite stay chain. knob lock set, weatherstripping, minigutter and threashold	36 x 80 see R.O. Detail
B	1	30x80 hollow core door w/panel frame and passage knob set	30 5/8 x 81 5/8
1	7	46x27 horizontal slider w/aluminum mill frame single glass, blinds and bug screen	46 1/4" x 27 1/4" up 41 1/4" A.F.F.

Dear John® Inc.

CUSTOM MODULAR, INC.
C & B
2224 Bloomingdale Drive
Bristol, Indiana 46507
PH: (574) 848-7300
FX: (574) 848-1950

ID	Revision	Date

Scale: 1/4" = 1'-0"	Drawn: BB	Date: 2/20/08	Plot Date: Feb 26, 2008
Serial Numbers:	Drawing Number: 826	DWG File Name: DJT830FO.dwg	

Approval Numbers: MT 252784

Title: Dear John Trailers 8 x 30 Office (8'-0" x 26'-0")

Sheet Description: Production Floor /Electrical Plan

Page #: A2